DATASHEET

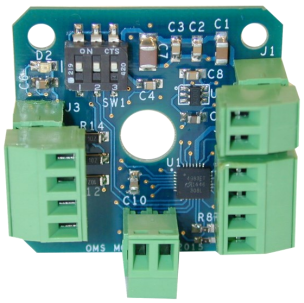

OMD17b

Stepper Motor

The OMD17b is an advanced stepper motor driver with selectable fractional step sizes in a small compact size. Its small design is compatible to mount on a NEMA 17 stepper motor, and includes a hole in the center so the shaft of a linear actuator motor can pass through when mounted on the motor. A current set resistor provides a very predictable current control and easy set up, particularly for production environments. The connectors are screw terminal plugs for easy and secure wiring.

FEATURES

- Integrated design
- Velocity = 0 to 2M steps per second
- Step resolutions include full, 1/2, 1/4, 1/8, & 1/16
- Single supply voltage +10V to +30V
- 0 to 1.5 amp phase current for high torque motors (1.7A peak)
- Center pass-through hole for linear actuator stepper motors
- No heat-sink required for typical current
- Motor current set through set-resistor on screw terminals
- Matches the NEMA 17 dimension for direct motor mounting
- Use existing motors or select the optimum motor for the application for cost control and best performance
- Screw-terminal connector plugs for convenient wiring
- LED indicator for status
- Exceptional value

"The Company in Motion"™

OMS Motion, Inc.

15201 NW Greenbrier Pkwy, B-1

Beaverton, Oregon 97006

503-629-8081, Fax: 503-629-0688

E-mail: SalesOR@OMSmotion.com

www.OMSmotion.com

Connector Pin-out

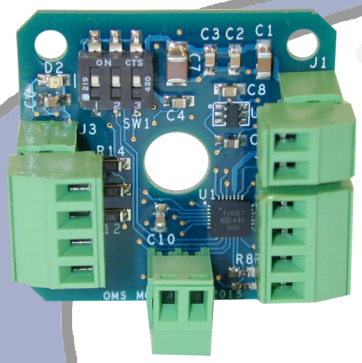

J3

Pin 1: +5 to 20V

Pin 2: Enable

Pin 3: Direction

Pin 4: Step

J1

Pin 1: +8-35VDC

Pin 2: Ground

J2

Pin 1: Phase 1A

Pin 2: Phase 1B

Pin 3: Phase 2A

Pin 4: Phase 2B

J4: Current Set

Typical Application

Dimensions

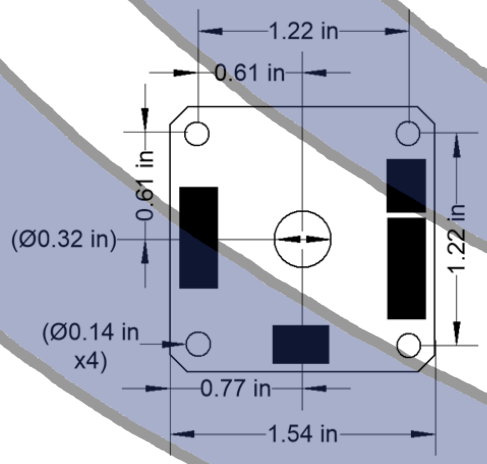

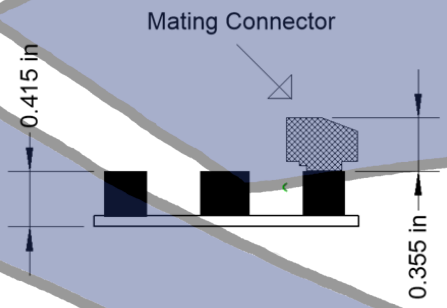

ISO 9001 QMI-SAI Global

ORDERING INFORMATION	
Model	**Description**
OMD17b	Controller & Step Driver, Size 17

OMS Motion, Inc.
15201 NW Greenbrier Pkwy, B-1
Beaverton, OR 97006

1(800) 707-8111, 503-629-8081
Fax: 503-629-0688
Sales@OMSmotion.com

www.OMSmotion.com

3701-4610017 rev.A